Room Impulse Response as a Prompt for Acoustic Echo Cancellation

Fei Zhao, Shulin He, Xueliang Zhang
zhaofei@mail.imu.edu.cn, cszxl@imu.edu.cn

Introduction

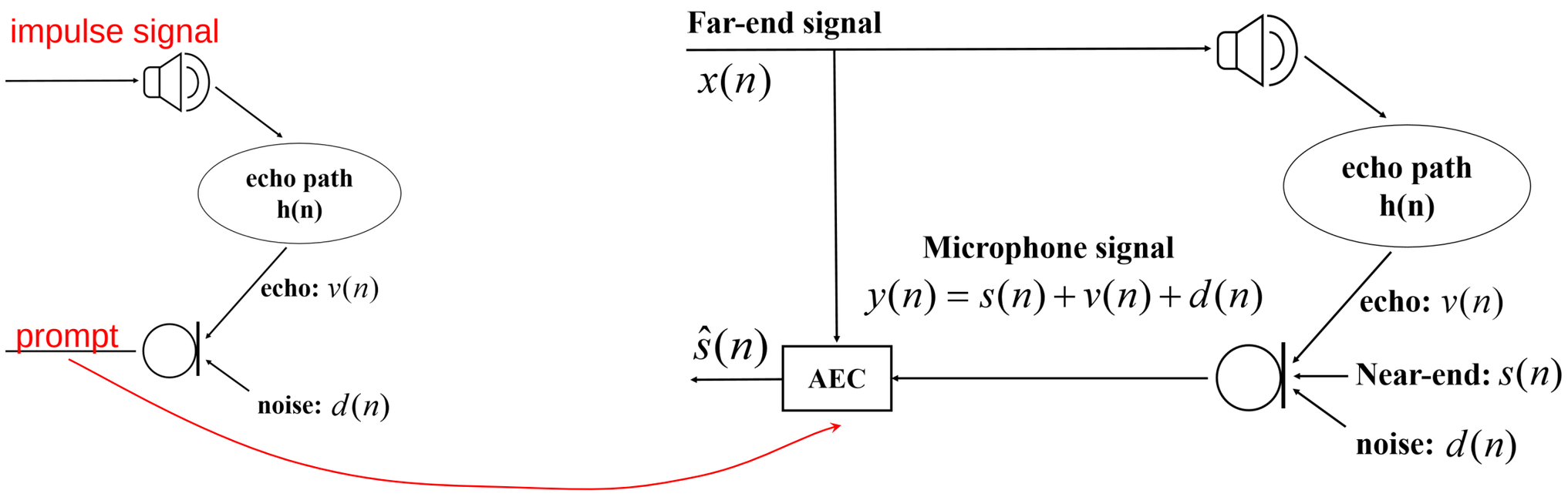

Proposed method

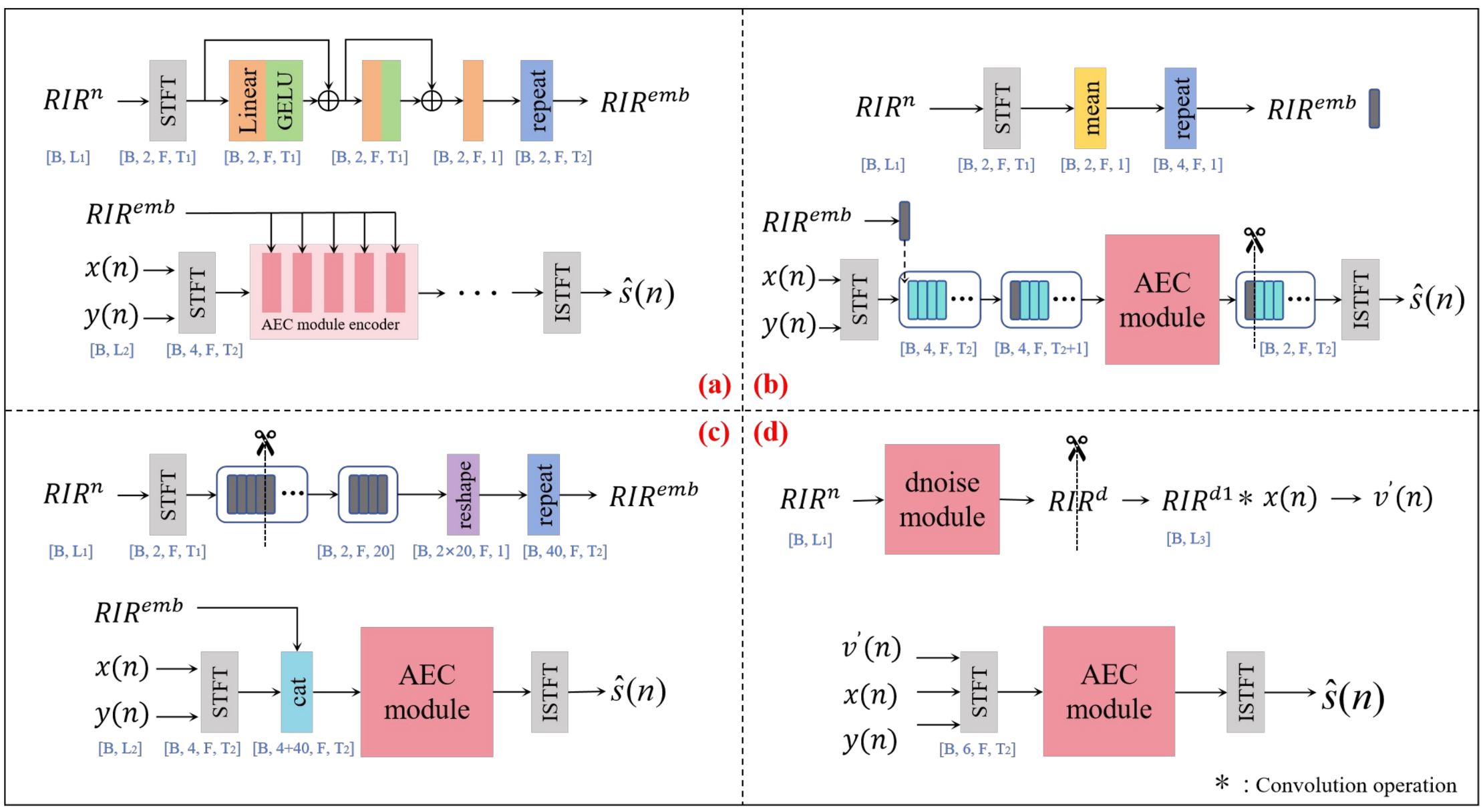

Experimental Results

Table 1: *Comparison of ICCRN and fusion of different RIR prompts 'DT' and 'ST_FE' represent double talk and far-end single talk scenarios respectively. For each metric, bold indicates the best value.*

Test RIR types	Match Synthetic RIR			Mismatch Synthetic RIR			Real RIR		
Test scenarios	DT		ST_FE	DT		ST_FE	DT		ST_FE
Model\Metric	PESQ	SDR	ERLE	PESQ	SDR	ERLE	PESQ	SDR	ERLE
mix	1.71	-1	—	1.71	-1	—	1.76	-1	—
ICCRN	2.96	13.34	43.08	1.98	4.28	5.32	2.05	3.61	3.73
+ RIR prompt fusion (a)	3.01	14.66	**47.13**	1.94	3.7	4.6	2.08	4.02	3.54
+ RIR prompt fusion (b)	2.97	14.01	42.44	1.95	4.03	5.23	2.13	4.29	3.99
+ RIR prompt fusion (c)	2.99	**14.78**	45.95	1.96	3.84	4.29	2.11	4.57	4.00
+ RIR prompt fusion (d)	**3.03**	13.23	44.94	**2.12**	**6.13**	**10.7**	**2.19**	**4.64**	**4.79**
MTFAA	2.46	11.56	25.43	2.43	11.32	24.51	2.03	7.75	9.79
+ RIR prompt fusion (d)	**2.59**	**12.14**	**29.37**	**2.56**	**11.98**	**28.48**	**2.25**	**10.16**	**16.1**

Conclusion

1. Core Innovation

- **RIR as a Prompt**: Proposes a novel use of Room Impulse Response (RIR) as an environmental "prompt" to guide the Acoustic Echo Cancellation (AEC) model, enabling dynamic adaptation to diverse acoustic conditions.
- **Four Integration Methods**: Explores four distinct techniques to embed RIR prompts into the AEC framework.

2. Key Results

- **Matched Conditions**: Enhances model accuracy when training and test RIRs align.
- **Mismatched Conditions**: Significantly boosts generalization, addressing a critical limitation of traditional AEC models in real-world deployments.
- **Computational Efficiency**: Maintains low computational overhead, suitable for edge devices.